iPlug

600-800 VA
Single-phase

Highlights

- Compact
- Versatile
- Robust
- Contemporary design
- Advanced communication
- Auto restart
- Battery swap
- ECO line environmental protection

The iPLUG series is the ideal solution for household, and small office systems. Its compact size and versatility, push-button operation, LED status panel and user replaceable batteries – make iPlug easy to install within a domestic environment to protect systems from surges and blackouts.
When mains power fails, the load is powered by the pseudo-sinewave inverter and built-in battery.
PowerShield[3] UPS monitoring and control software can be used for an orderly unattended shutdown of IT systems. PowerShield[3] can be downloaded free of charge from **www.riello-ups.com**

Versatile, robust and a contemporary design
iPlug's compact and ergonomic design allow the UPS to be easily used within professional and domestic environments. iPlug is extremely versatile and its innovative cable management feature ensures a clean, easy to manage installation.

Advanced communication

PowerShield³ software for the safe and unattended shutdown of connected IT systems on mains power supply failure. PowerShield³ provides efficient and intuitive UPS management through bar chart displays of important operating information.

Automatic Restart

The UPS automatically restarts when the mains power supply is restored, after auto power.

ECO Line environmental protection

iPlug features a unique shut-off button to reduce energy consumption during periods of prolonged inactivity.

Applications

LCD monitors, personal computers, VDUs, printers, scanners and faxes.

Features

- ECO LINE product
- Compact and ergonomic
- 5 Battery runtime protected sockets
- 3 Surge protected sockets for powering larger absorption loads such as laser printers
- Ability to switch on the UPS without a mains power supply (Cold Start)
- User replaceable batteries (Battery Swap)
- USB Interface
- Can be placed on a desktop or the floor
- Power cable included
- Short-circuit protection
- Auto restart (when mains power is restored, after a battery discharge)
- GS/Nemko Safety mark
- Available with French (2P+T), English, Shuko and Italian outlets.
- PowerShield³ supervision and shutdownsoftware for Windows operating systems 7, 2008, Vista, 2003, XP, Linux, Mac OS X and Sun Solaris
- Plug and Play function

2-YEAR WARRANTY

configurator for model selection

Load type	Power
	VA *
Personal computer	250
LCD Monitor	70
15” Monitor	150
Scanner, printer	200
Modem, TV, DVD players, PlayStation, Hi-Fi, telephone, Fax	50
Laser printer **	200

* Average estimated value
** Use of the iPLUG filtered power output is recommended.

Available sockets

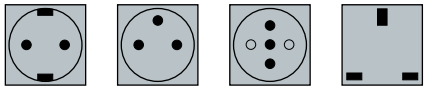

SCHUKO SOCKET CEE 7/7P | FRENCH SOCKET CEE 7/5 | ITALIAN SOCKET CEI 23/16 | ENGLISH SOCKET BS1363A

details

IPG 600 - IPG 800

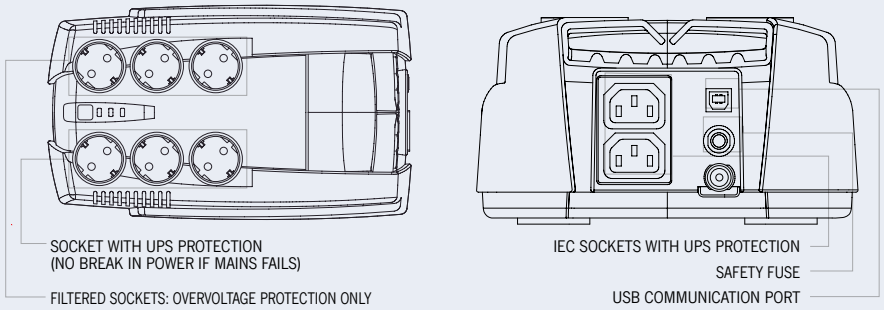

MODELS	IPG 600	IPG 800
POWER	600VA/360W	800VA/480W
INPUT		
Nominal voltage	220-240 Vac	
Input voltage tolerance	230 Vac (+20/-25%)	
Frequency	50/60 Hz with automatic selection	
OUTPUT		
Voltage during mains operation	230 Vac (+20/-25%)	
Voltage during battery operation	230 Vac (+/- 10%)	
Frequency during battery operation	50 or 60 Hz (+/- 1%)	
Waveform	Pseudo-sine	
BATTERIES		
Type	VRLA AGM lead acid maintenance free batteries	
Charging time	6-8 hours	
OTHER FEATURES		
Net weight (kg)	3.7	4.1
Gross weight (kg)	4	4.4
Dimensions (hwd) (mm)	99 x 175 x 313	
Packaging dimensions (hwd) (mm)	260 x 380 x 140	
Communication	USB	
Output socket	6 sockets (Shuko or Italian or French or English) + 2 IEC 320 C13	
Regulations	EN 62040-1-1 and Directive EN 62040-3 EN 62040-2 and Directive 2004/108 EC	
Trademarks	CE; GS/NEMKO on Shuko version	
Ambient temperature	0°C / +40°C	
Colour	Black	
Altitude and relative humidity	6000 m max altitude, < 95% non-condensing	
Standard equipment provided	power cable, user guide	